Working Voltage	500
Frequency Range	DC to 300 MHz
Impedence	50 Ohms

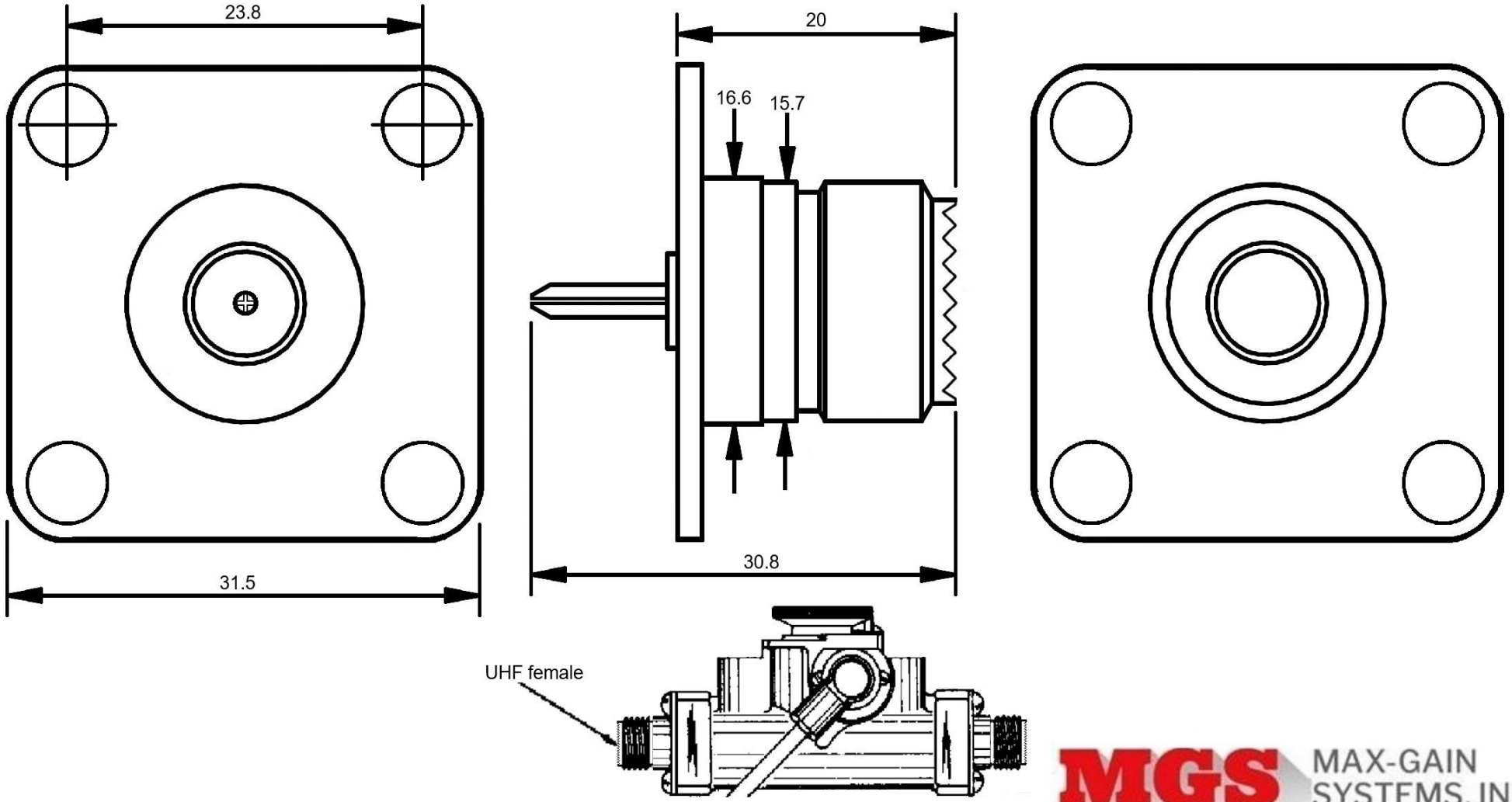

NO.	DESCRIPTION	MATERIAL	FINISH	QTY
8				1
7				1
6				1
5				1
4				1
3	PIN	BERYLLIUM COPPER	SILVER	1
2	INSULATOR	TEFLON	WHITE	1
1	BODY	BRASS	NICKEL	1

UNLESS OTHERWISE SPECIFIED TOLERANCES
0.5–5 = ±0.2
5–30 = ±0.4
30–120 = ±0.6
120–315 = ±1
315–1000 = ±1.6
1000–2000 = ±2.4

UNIT: mm

SCALE: -

PART NO DATE

APPROVED DATE

CHECKED DATE

DRAWN DATE

MGS MAX-GAIN SYSTEMS, INC.

Max-Gain Systems, Inc.
150 Dodd Street SE, Marietta, GA. 30060
Phone: (770) 973-6251 | **Fax:** (678) 401-3854
Website: www.mgs4u.com | **E-Mail:** sales@mgs4u.com

TITLE: UHF to QC for Bird Female Adapter

DRAWING NO: 9100

CAGE CODE: 7JZZ8