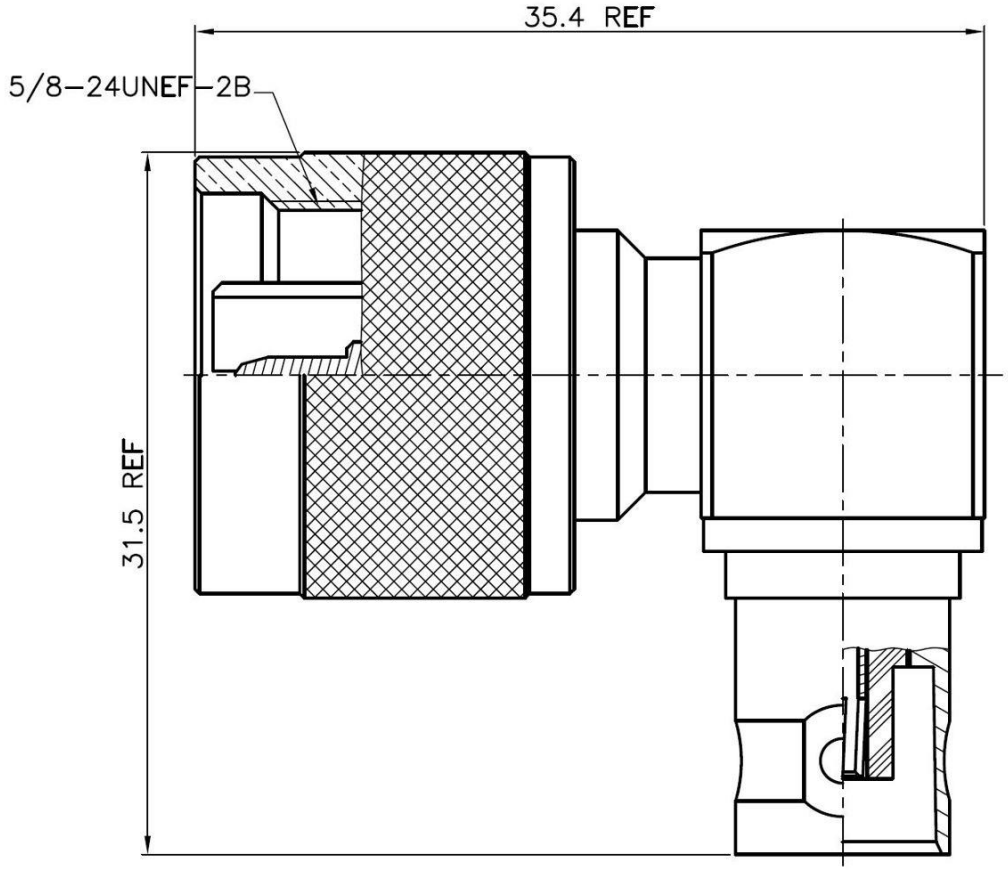

NO.	DESCRIPTION	MATERIAL	FINISH
	SHELL	BRASS	NICKEL
	C RING	BRASS	NONE
	GASKET	SILICONE	ORANGE
	PIN	BRASS	GOLD
	INSULATOR	DELRIN	WHITE
	BODY	BRASS	NICKEL

UNLESS OTHERWISE SPECIFIED TOLERANCES
0.5–5 = ±0.2
5–30 = ±0.4
30–120 = ±0.6
120–315 = ±1
315–1000 = ±1.6
1000–2000 = ±2.4

UNIT: mm

SCALE: .

PART NO DATE

APPROVED DATE

CHECKED DATE

DRAWN DATE

MGS MAX-GAIN SYSTEMS, INC.

Max-Gain Systems, Inc.
150 Dodd Street SE, Marietta, GA. 30060
Phone: (770) 973-6251 | **Fax:** (678) 401-3854
Website: www.mgs4u.com | **E-Mail:** sales@mgs4u.com

TITLE: Type N male to BNC female Right Angle Adapter

DRAWING NO: 7324-RA

CAGE CODE: 7JZZ8