MAX-GAIN SYSTEMS, INC.

150 Dodd Street SE
Marietta, GA. 30060

Phone: 770-973-6251
Fax: 678-401-3854

Email: info@mgs4u.com
Website: www.mgs4u.com

PL-259, UHF male, Solder-On, Cable End Connector
+ UG-174 Reducer

Technical Data Sheet

This connector is made from a Solid Brass body that is precision machined and plated with silver for superior performance and value. This PL-259, UHF male, solder-on, cable end connector has a PTFE dielectric and a silver plated brass center pin. The UHF male side (also known as a PL-259 connection) is by far the most popular connection type used in Amateur Radio. This RF connector, with a UG-174 (7506-S) reducer, fits (but not limited to) RG-174, RG-188, RG-188A/U, RG-316, RG-316/U Double Shield, LMR-100A, Belden 7805R, Belden 8216, Belden 83269, Belden 83284, Belden 84316, and other 0.100 Inch OD coaxial cable. In order to fit larger coax sizes (0.390 and 0.400 Inch OD coax), do not use a reducer, for 0.240 Inch OD coax, use a 7508-S (UG-176) and for 0.195 Inch OD Coax, use a 7507-S (UG-175) reducer.

Material Specifications

PL-259, Solder-On, Cable End Connector + UG-174 **Part Number 7500-UHF-174**

Description	Material	Plating
Insulator	**PTFE**	**White**
Shell	**Brass**	**Silver**
Pin	**Brass**	**Silver**
Body	**Brass**	**Silver**

Mechanical Specifications

Size	Dimension
Length	**1.74 in (44.1 mm)**
Width	**0.705 in (17.9 mm)**
Height	**0.705 in (17.9 mm)**
Weight	**1.2 oz (34 g)**

Environmental Specifications

Temperature	Spec
Operating Range	**-65 to +165 deg C**

Compliance Certifications (see product page for current documentation)

Availability Click the following link (or enter part number in the “SEARCH” bar at the top of any page of the website) to obtain additional part information including price, inventory and certifications: https://mgs4u.com/product/pl-259-uhf-male-solder-connector-0-100-inch-od-coax-ug-174-reducer-combo-for-7500-uhf-174/

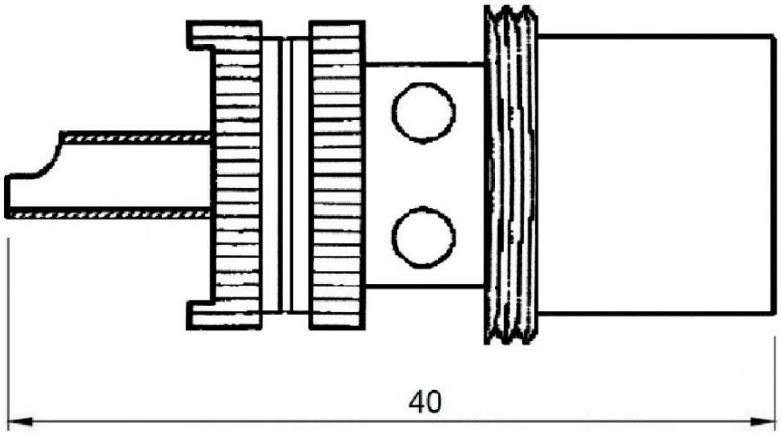

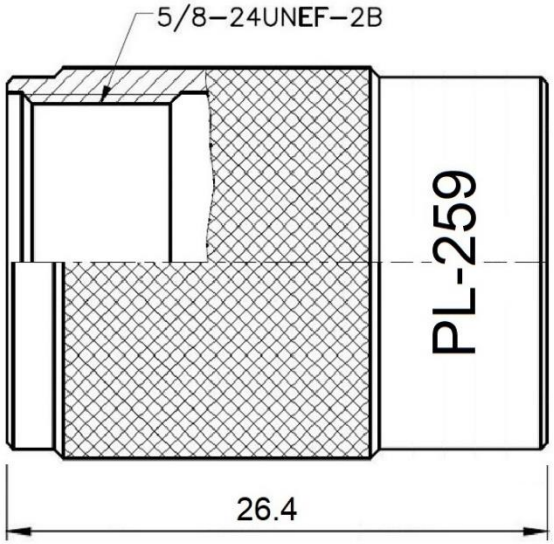

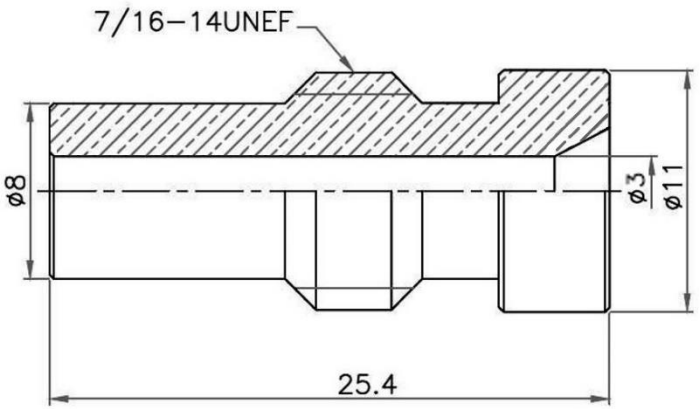

SPECIFICATIONS
VOLTAGE RATING: 500 VOLTS RMS
IMPEDANCE: NON CONSTANT
FREQUENCY RANGE: 0-300

FIT:
For all 0.390 to 0.400 OD Coax Types Including RG-8, RG-213, Belden 9913, LMR-400

w/ 7508-S Reducer
For all 0.240 OD Coax Types Including RG-8X, mini 8, RG-59, Belden 9258, LMR-240

w/ 507-S Reducer
For all 0.195 OD Coax Types Including RG-58, RG-142, RG-223, RG-400, LMR-195

w/ 7506-S Reducer
For all 0.100 OD Coax Types Including RG-174, RG-178, RG-188, RG-196, Belden 8216, LMR-100

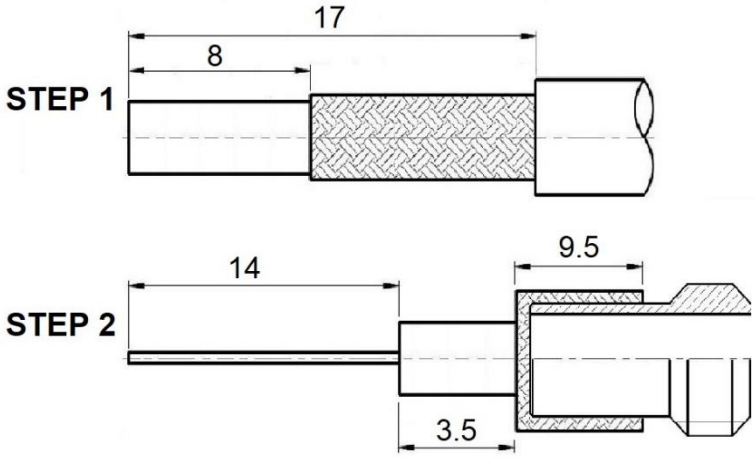

Alternate stripping required when NOT using reducers

MGS MAX-GAIN SYSTEMS, INC.

Max-Gain Systems, Inc.
150 Dodd Street SE, Marietta, GA. 30060
Phone: (770) 973-6251 | **Fax:** (678) 401-3854
Website: www.mgs4u.com | **E-Mail:** sales@mgs4u.com

NO.	DESCRIPTION	MATERIAL	FINISH
	PIN	BRASS	SILVER
	SHELL	BRASS	SILVER
	DIELECTRIC	TEFLON	WHITE
	BODY	BRASS	SILVER

UNLESS OTHERWISE SPECIFIED TOLERANCES
0.5–5 = ±0.2
5–30 = ±0.4
30–120 = ±0.6
120–315 = ±1
315–1000 = ±1.6
1000–2000 = ±2.4

UNIT: mm
SCALE: .

PART NO DATE
APPROVED DATE
CHECKED DATE
DRAWN DATE

TITLE: PL-259 UHF male Solder On, w/ Reducer for 0.100 Inch OD Coax
DRAWING NO: 7500-UHF-174
FILE NO : .

Installation Guide

We will begin by installing the PL-259 connector on a piece of RG-174. This process is the same for all the other types of cable that fit the PL-259 connector with a UG-174 reducer. These connectors fit on a wide range of coax types including: RG-174, RG-188, RG-188A/U, RG-316, RG-316/U Double Shield, LMR-100A, Belden 7805R, Belden 8216, Belden 83269, Belden 83284, Belden 84316, and other 0.100 Inch OD Coaxial cable.

Coax Stripping:

First cut your cable to the desired length and place the outer shell and reducer onto the coax. Strip the black jacket back approximately .689 inches. When the jacket is stripped cut the braid/foil back 0.315 of an inch from the fresh cut end.

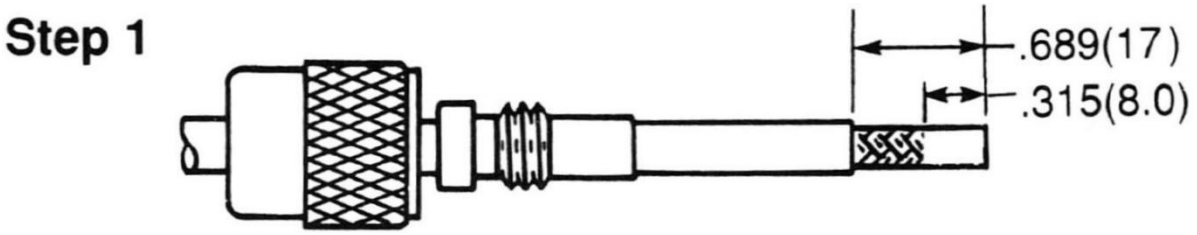

Move the reducer up to the end of the black jacket and fold back the braid onto the reducer. If there are any strands of the braid, that make contact with the threads, trim them with small diagonal cutters. Finally, cut back the dielectric 0.551 of an inch from the fresh end down to the center conductor.

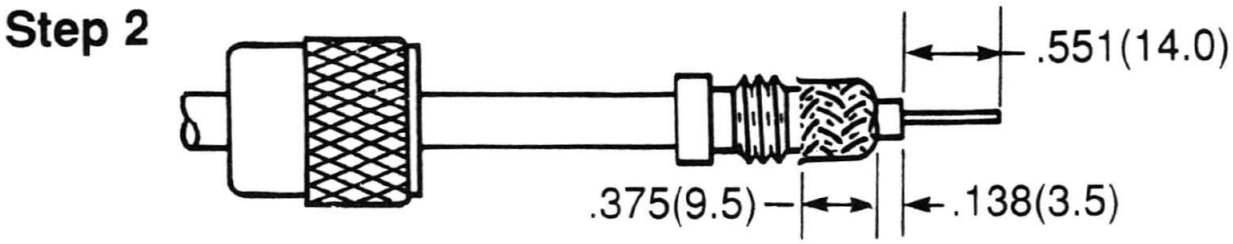

Main Body Install:

Put the PL-259 main body on the end of the cable and thread it on to the reducer by turning it right (clockwise) till the center conductor is flush with the tip end of the center

pin of the PL-259 connector itself. The center conductor may stick out past the center pin which then should be cut flush to be no longer than the center pin.

FAQ #1: Why wont the center conductor go into the connector?

Answer 1: The center is bent off of center. Ensure the center conductor is perfectly straight before screwing the connector body onto the coax.

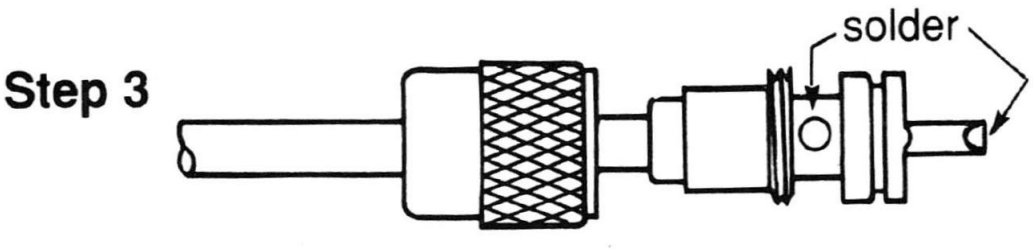

Soldering Guide:

This soldering guide is for soldering Max-Gain Systems, Inc. PL-259 connectors. These are approximate measurements for our PL-259 connectors, which adhere to industry standards for this type connector. If you choose to use this guide for connectors sold by others who do NOT adhere to these standards, the measurements could be off and result in a poor installation.

Now we begin soldering the PL-259 connector to the cable. Begin by applying heat to the center pin of the PL-259 connector with your soldering iron. Before proceeding, allow sufficient time for the soldering iron tip to reach full operating temperature and clean the tip of the iron by wiping it with a damp sponge. Be sure the soldering iron is on the bottom side of the center pin. The heat rises and heats up the pin faster. When the pin is heated, apply the solder to the tip of the center conductor. Allow sufficient solder to flow to seal the center conductor inside the center pin.

Once the center pin is sealed with solder, move the soldering iron to the holes of the PL-259. Make sure to fill all four of the holes with solder flush with the top of each hole. Once all four holes of the PL-259 are filled with solder let the connector cool down. When the connector is cool take the sleeve (which should have been put on the cable before the PL-259 was screwed on the cable) and slide it up the cable onto the connector and screw it up into place.

Step 4

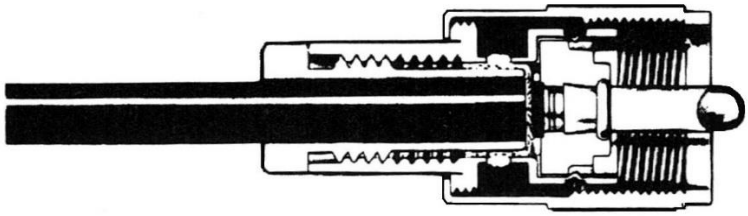

Final Testing:

When this is completed, as a final test, you should always check resistance from the center pin to the body with an ohmmeter in a low resistance scale. After verifying that there are no braid – to – center pin shorts on the other end of the coaxial cable, you should see infinite resistance (open).

As a final check, inspect the tip of the center pin to be certain that there is no excess solder present. This could interfere with easy insertion of the tip of the PL-259 into the female (SO-239) connector. If there is a tiny bit of excess solder present, it can usually be easily removed. Lightly scrape the soft solder with the edge of a knife blade until smooth. This completes your PL-259 installation, and the connector is ready for use!