REVISIONS			
LTR	DESCRIPTION	DATE	APPROVED
A	SHTS 2&3 ADD .020 & .51 PER ECO (78362)	7/21/98	JE 02 July 98
B	PER ECO # 79151	3/13/00	[illegible] 3/13/00
C	SHT 4, PER ECO # 79629	7/18/00	RJS 7/21/00
D	SHT 4, 4.0 mΩ WAS 20.0 mΩ (B1419)	2/17/06	RJS 2/17/06

ORIGINAL DATE OF DRAWING 3/25/98	**JENNINGS** 970 McLAUGHLIN AVE. SAN JOSE, CALIF. 95122
DRAFTSMAN [illegible]	DRAWING TITLE RELAY – VACUUM SPST RF 72-26 N1107
CHECKER	
ENGINEERING APPROVAL [illegible]	
SUBMITTED	SIZE A · CODE IDENT. NO. 73905 · DRAWING NO. 3061
APPROVAL	SHEET 1 OF 4

121F 11-88

REV. D

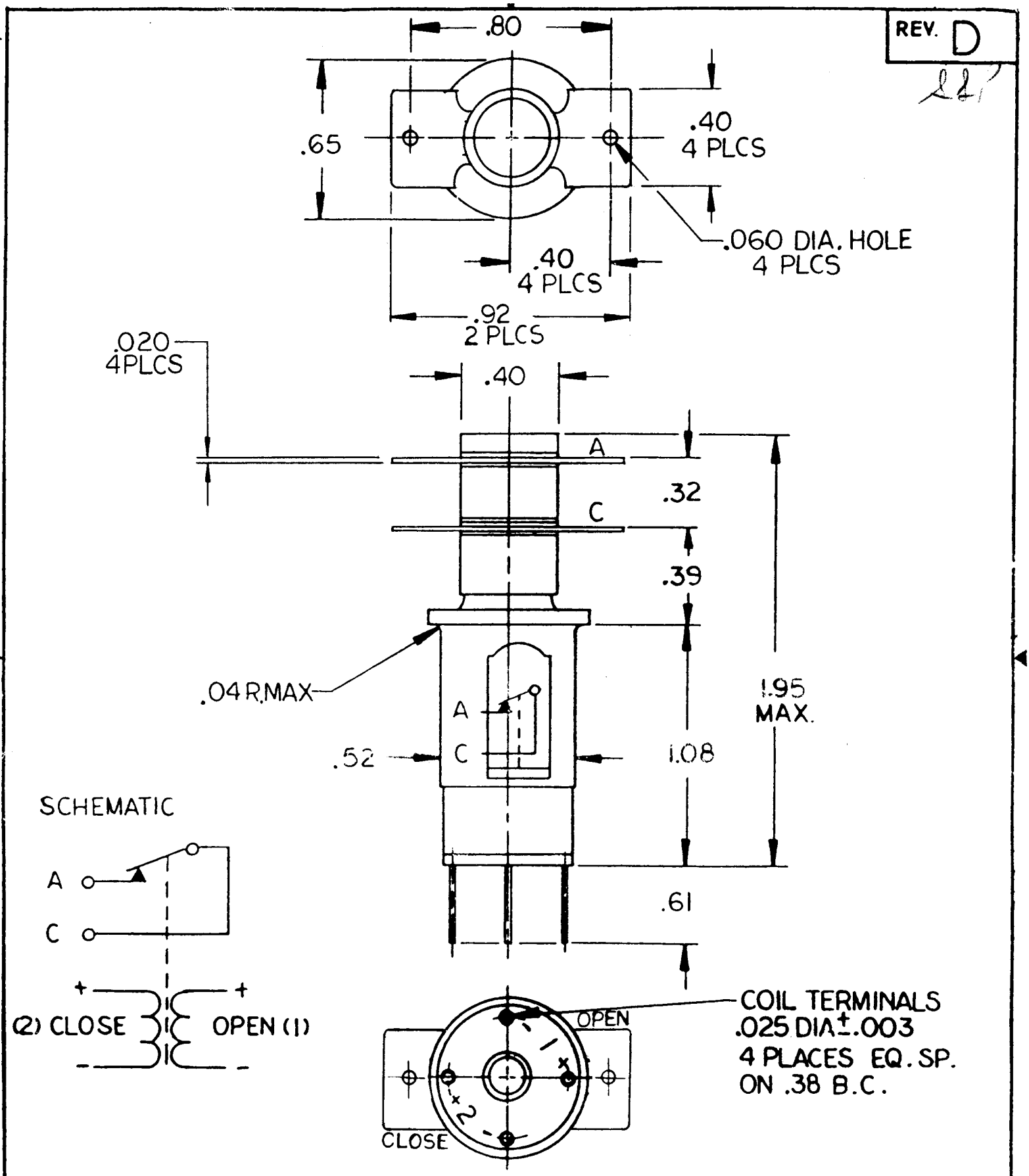

UNLESS OTHERWISE SPECIFIED DIMENSIONS ARE IN INCHES TOLERANCE ON DECIMALS x±.1 xx±.03 xxx±.010 ANGLES ±2°	CODE IDENT. NO. 73905	SIZE A	DRAWING NO. 3061
	SCALE NONE	UNIT WEIGHT	SHEET 2 OF 4

REV. D

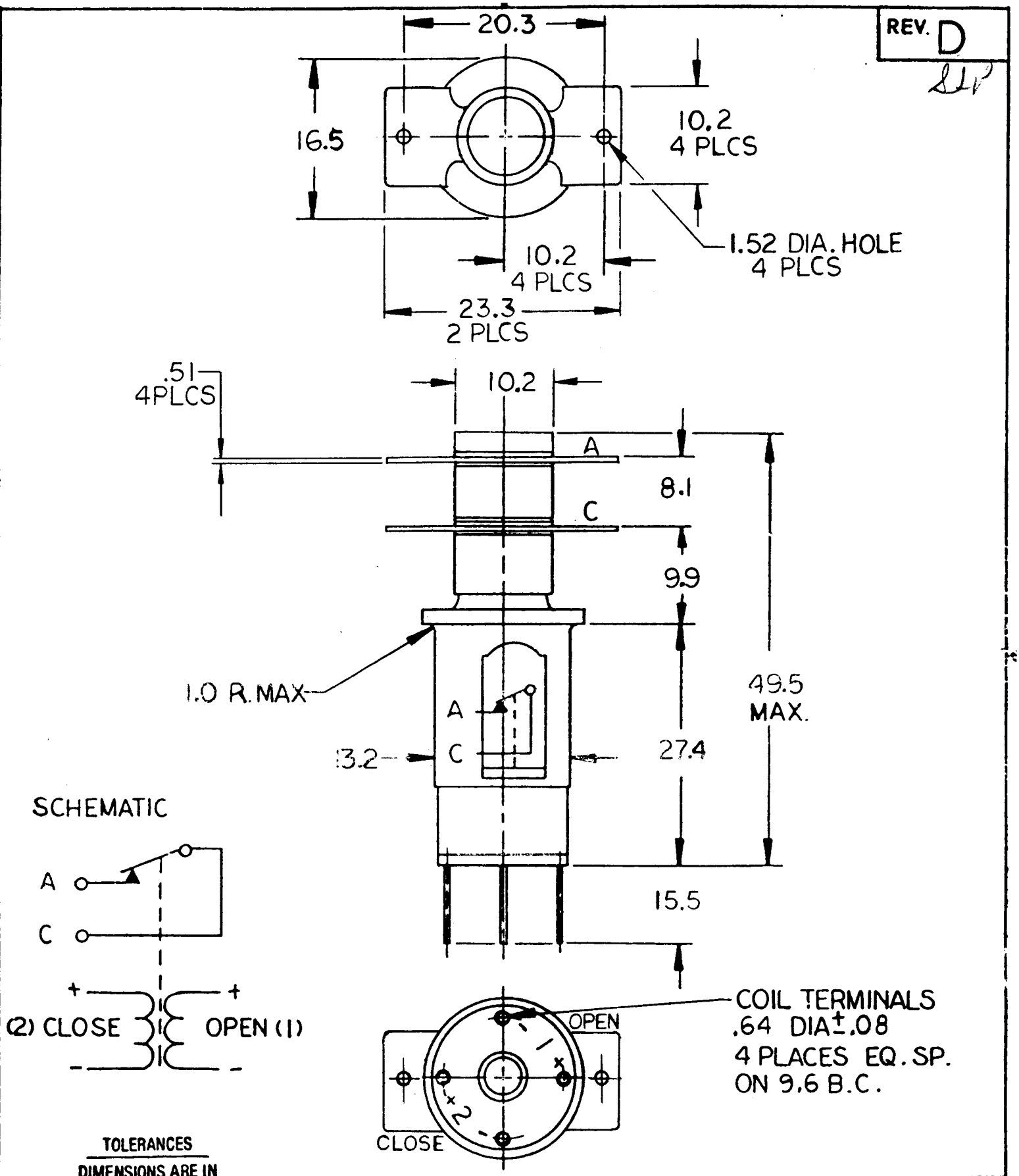

TOLERANCES

DIMENSIONS ARE IN

MILLIMETERS			RADIANS
X	.X	.XX	±0.04
±3	±1.0	±0.40	

CODE IDENT. NO.	SIZE	DRAWING NO.
73905	A	3061
SCALE NONE	UNIT WEIGHT	SHEET 3 OF 4

0675807-73

REV. D

Physical Specifications	Units	
Contact Arrangement	-	Form P SPST Latching
Size	-	Inch: see sheet 2; mm: see sheet 3
Weight	Oz (g)	1.0 (28)
Mechanical Life	Cycles	2 million

Environmental Data	Unit	
Shock[1]	g	50 (1/2 sine)
Vibration[2]	g	30 (55 to 1000 Hz)
Temperature Range Operating	°C	-40°C to +85°C (storage –65 to +125)

High Voltage Contacts	Units	Operating Frequency					
Terminal to Terminal and Common to Frame		DC	50/60 Hz	2.5 MHz	8 MHz	16 MHz	32 MHz
Test Voltage[4]	kVp	-	10	-	-	-	-
Operating Voltage[4]	kVp	6	8	8	7	6	5
Current Carry[3] (AC=rms)	A	50	50	35	25	18	12
Contact Resistance	mΩ	4.0 (max.)					
Capacitance[4]	pF	1.6 (max.)					
Coil to Frame Isolation	Vrms	500 (min)					

Operating Specifications	Units	min.	nom.	max.
Coil Resistance[5] (at 25°C)	Ω	76	80	84
Coil Voltage	Vdc	22	26.5	32
Coil Power-intermittent duty [6,7]	W	-	8.8	-
Actuating time[5], HV contacts (includes Bounce)				
To open at 26.5V, 25°C (Coil 1)	ms	-	2.0	2.5
To open at 22 to 32V, -40 to +85°C (Coil 1)	ms	0.3	-	4.0
To close at 26.5V, 25°C (Coil 2)	ms	-	1.5	2.5
To close at 22 to 32V, -40 to +85°C (Coil 2)	ms	0.3	-	4.0
Transfer Voltage[5], HV Contacts				
Pull-in Voltage to open at 25°C (Coil 1)	Vdc	5	10	16
Pull-in Voltage to open –40 to +85°C (Coil 1)	Vdc	3	-	22
Drop-out Voltage to close at 25°C (Coil 2)	Vdc	6	13	20
Drop-out Voltage to close –40 to +85°C (Coil 2)	Vdc	3	-	22

1. Per MIL-STD-202, Method 213, Test Condition A (50g, 11ms)
2. Per MIL-STD-202, Method 204, Test Condition D, Except 20g peak amplitude.
3. When mounted on an aluminum plate or its equivalent having min. dimensions of 2" x 2" x .040" thick.
4. Between H.V. terminals and between common and frame.
5. Temperature specified is the coil temperature. Coil resistance changes .39% / °C.
6. Maximum average coil power is 0.9 W each coil.
7. Recommended Coil Pulse: 6.0ms min., 15ms max.
8. Do not suppress coil transient voltage with "Free Wheeling", "Flyback", or "Catch" diode method as this will increase relay actuating time. Use Zener diode ≥ nom. Voltage.